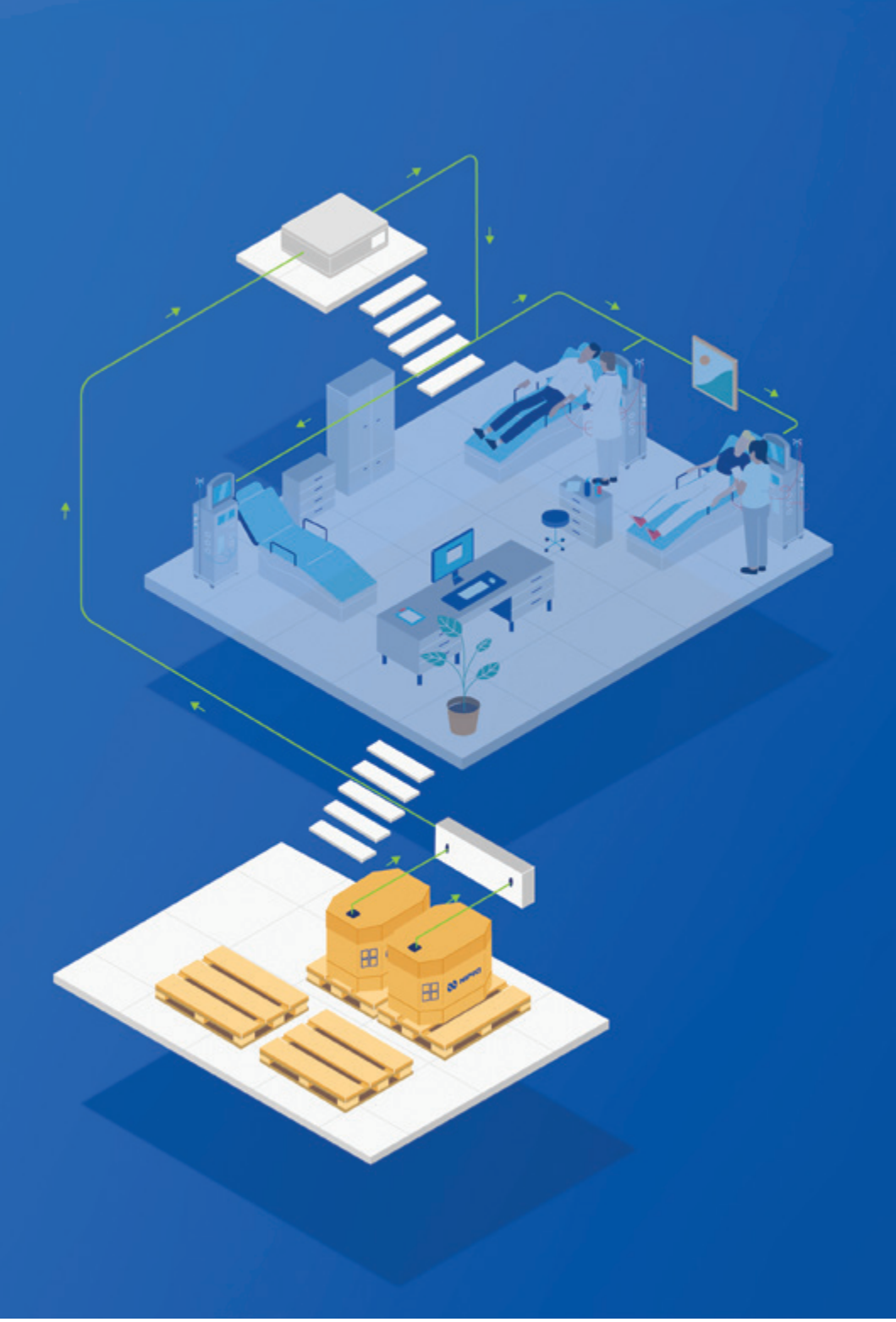

GravineXt™

ACID CONCENTRATE DELIVERY SYSTEM

NIPRO

GravineXt™

ACID CONCENTRATE DELIVERY SYSTEM

Designed to transfer dialysis concentrate from storage tanks to the dialysis machine.

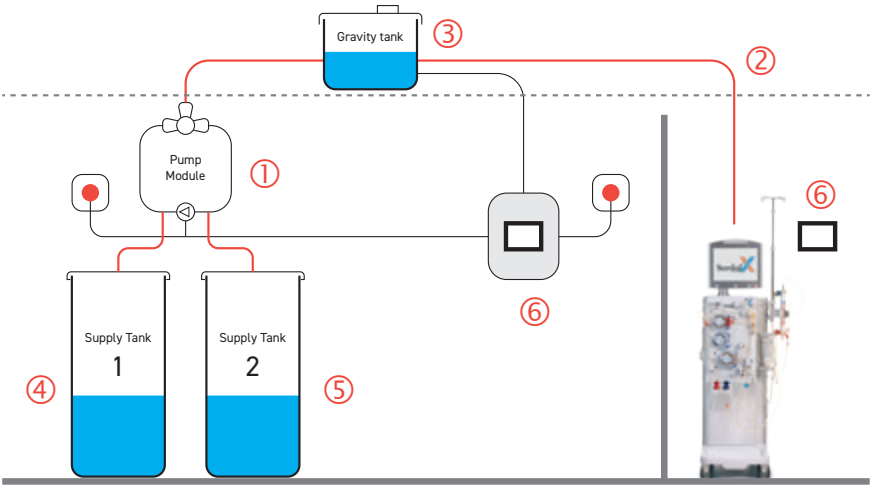

Working Principle

1. The pump moves the concentrate from its tank to the gravity tank.
2. From the gravity tank, the concentrate is delivered to dialysis machines by gravitational force.
3. Sensors in the gravity tank automatically detect when it must be refilled.

Flexible Installation

4. GravineXt can be connected to up to 4 tanks, with up to 2 different types of concentrate. For each type of concentrate, while one tank is in operation the other is on standby.

Versatile Supply

5. GravineXt is suitable for tanks, octabins (with top or bottom connections), bag-in-boxes, mixing systems of any sizes, and all types of formulas.

Monitoring GravineXt

6. Control panel with 5.7'' (14 cm) touch screen:
   - in the storage room
   - on the dialysis unit (optional)
   - displayed on a computer and/or phone (Ethernet/SIM card)

Why use gravitational force?

Gravity ensures equal pressure across the loop, reducing the risk of leakage.



Ethernet Connection

- Warning when octabin/bag-in-box is empty
- Technical service team notified of failures
- Actions and alarm failure history

Why choose GravineXt?



Uninterrupted supply in automatic mode

- **Automated switching between concentrate tanks**
- **Optional automatic start with reverse osmosis systems**
- **Level indicator for volume remaining in the octabin/bag-in-box**

Quality & Safety

- Double pump system per concentrate type, allowing high operational safety in the unlikely event of one pump failing
- Dry-running safety pumps
- Uses corrosion-free polypropylene
- Low pressure system
- Four level sensors
- Alarm log

Simple & Flexible

- Single-use concentrates can be completely replaced
- Reduces dialysis preparation time
- Minimal ecological footprint
- Frees up storage space

Technical Data

Performance

Max. pump capacity	5.7 L/min
Max. height from pump module to gravity tank	30 m
Max. distance from pump module to gravity tank	50 m
Gravity tank capacity	54 L or 80 L
Max. beds	30 (54 L) | 60 (80 L)

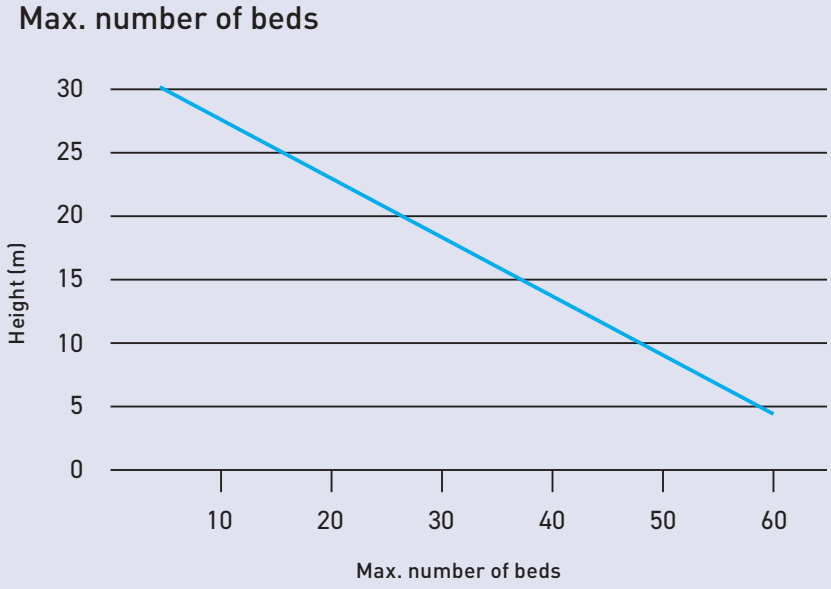

Electrical data

Supply voltage	230 V / 50 Hz (± 10%)
Max. electrical consumption	0.9 kW
Pre-fuse	16 A
	Leakage current protection 30 mA

Connections

Supply tanks connection	Hose connection DN 10x8, connectors
Loop (gravity tank to dialysis machines)	Hose connection DN 10x14, connectors
Electrical connection	CEE 7 standard

Ambient temperature

Storage / transport	1-35°C
Operation	10-35°C
Relative humidity	< 95% without condensation
Air pressure	795-1062 hPa

Dimensions

Switch cabinet	480 x 690 x 240 mm
Gravity tank (54 L)	700 x (200 + 55 (vent filter)) x 400 mm
Gravity tank (80 L)	700 x (300 + 55 (vent filter)) x 400 mm
Pump module	710 x 400 x 160 mm

GravineXt™

Make it easy

Move from individual containers to an automated central supply with GravineXt

Save on effort

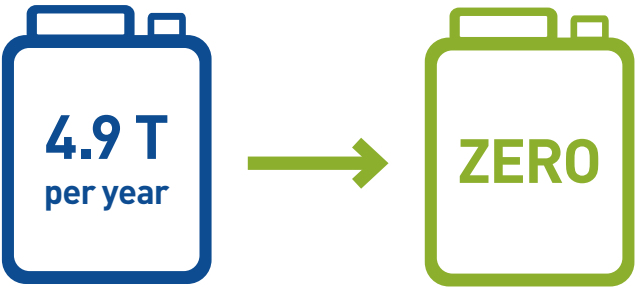

handled by nurse

Make it greener[1]

92%*
reduction in water use from the production of acid and its components

Save on water

40%*
Reduction in kg of CO_2 eq[2]

Save on emissions

48%*
reduction in carton waste

78%*
reduction in volume of plastic waste

Save on packaging

in pursuit of a better tomorrow

1. French analysis of GravineXt life cycle compared to single-use bags
2. Evaluation by In Extenso organization. 2022. Report available upon request.

* up to

MM-MM-444214287 - GravineXt - EN - Trifold - 16.Oct.2024

NIPRO Live Longer. Live Better.
NIPRO Corporation
3-26 Senriokashinmachi, Settsu-shi, Osaka 566-8510, JAPAN. | www.nipro.co.jp