

Now with large sized
cell filter and tray

Rebirth*Pro2*™

Thrombus Aspiration Catheter

NIPRO

FEATURES

Powerful aspiration

Dynamic aspiration is rapidly achieved by maintaining a large and consistent inner lumen profile (cross sectional area: 6F = 0.97 mm², 7F = 1.23 mm²).

Superior deliverability

Durable hydrophilic coating ensures minimal resistance during insertion into guide catheter and vasculature, providing for greater distal delivery.

Tracking along guidewire

The extended 22 cm guidewire lumen improves guidewire tracking and deliverability.

User friendly system

A two package system allows for the 1st operator to prepare the aspiration catheter while 2nd operator prepares the accessories. Furthermore, the extension tube, 2 way stopcock and syringe is pre-connected, reducing required set up time.

Thrombus filter

A large size filter is included with accessories and can be fitted to 500 mL beakers found in cath labs. A smaller cell strainer is also included for further pathological testing.

Double aspiration

A 3 way stopcock is included to attach two 30 mL syringes simultaneously.

CATHETER DESIGN

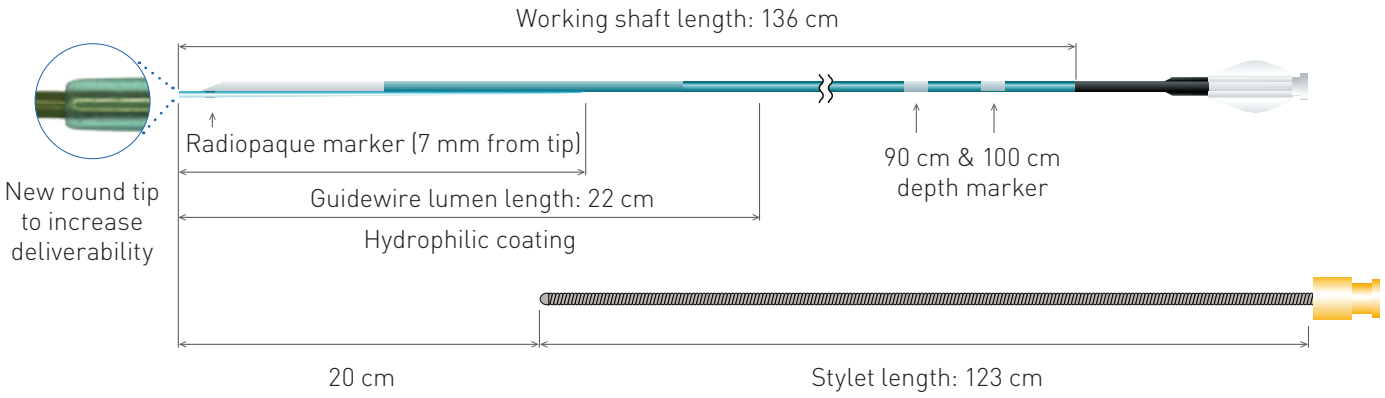

ORDERING INFORMATION

Model No.	Outer Diameter		Inner Diameter	Working Length	Compatible Guide Catheter (min. inner diameter)	Compatible Guidewire (max. outer diameter)	Guidewire Lumen Length
	Distal (short x long axis)	Proximal					
TM6-111F	1.35 mm x 1.62 mm	1.38 mm	1.11 mm	136 cm	6F (1.78 mm / 0.070 inch)	0.36 mm (0.014 inch)	22 cm
TM7-125F	1.60 mm x 1.90 mm	1.58 mm	1.25 mm	136 cm	7F (2.03 mm / 0.080 inch)	0.36 mm (0.014 inch)	22 cm

ACCESORIES

Stylet (pre-inserted), 2 x 30 mL syringe, extension tube, flushing device, 2 way stopcock, 3 way stopcock, cell strainer, filter, drainage tray.



SMOOTH DELIVERY | POWERFUL ASPIRATION | OUTSTANDING RESULTS

NIPRO CORPORATION Japan is a leading global healthcare company established in 1954. With over 39,000+ employees worldwide, NIPRO serves the Medical Device, Pharmaceutical, and Pharmaceutical Packaging industries.

NIPRO is dedicated to providing interventional cardiologists and vascular surgeons with tools to perform delicate lifesaving and life-enhancing procedures to treat patients with vascular and coronary diseases.

We develop, manufacture, and market cutting-edge technology as well as the newest techniques, innovative solutions, and complex advancements to reshape the vascular space globally. Working hand in hand with physicians, we are focused on providing the best possible care for patients.

NIPRO is dedicated to advancing the diagnosis and management of coronary artery disease worldwide as part of our promise to help people.

Live Longer. Live Better.

Bro-RebirthPro2- 03.Jul.2025

NIPRO Live Longer. Live Better.
NIPRO Corporation
3-26 Senriokashinmachi, Settsu-shi, Osaka 566-8510, JAPAN. | www.nipro.co.jp